US 20190301034A1

(19) **United States**

(12) **Patent Application Publication**

(10) **Pub. No.: US 2019/0301034 A1**

(43) **Pub. Date: Oct. 3, 2019**

Pain et al.

(54) **ELECTROCHEMICAL LAYER DEPOSITION BY CONTROLLABLE ANODE ARRAY**

(71) Applicant: **Fabric8Labs, Inc.**, Berkeley, CA (US)

(72) Inventors: **David Forrest Pain**, San Diego, CA (US); **David Morgan Wirth**, Huber Heights, CA (US); **Jeffrey William Herman**, Berkeley, CA (US)

(73) Assignee: **Fabric8Labs, Inc.**, Berkeley, CA (US)

(21) Appl. No.: **16/432,857**

(22) Filed: **Jun. 5, 2019**

Related U.S. Application Data

(63) Continuation of application No. 15/356,210, filed on Nov. 18, 2016.

(60) Provisional application No. 62/257,333, filed on Nov. 19, 2015.

Publication Classification

(51) **Int. Cl.**

C25D 1/00	(2006.01)
C25D 15/00	(2006.01)
B33Y 70/00	(2006.01)
C25D 3/38	(2006.01)
C25D 3/22	(2006.01)
C25D 3/40	(2006.01)
B33Y 30/00	(2006.01)
C25D 3/12	(2006.01)
C25D 3/20	(2006.01)
C25D 3/24	(2006.01)
C25D 21/12	(2006.01)
C25D 3/44	(2006.01)
C25D 3/46	(2006.01)
C25D 5/04	(2006.01)
C25D 5/10	(2006.01)
C25D 9/02	(2006.01)
B33Y 10/00	(2006.01)
B33Y 50/02	(2006.01)
C25D 17/12	(2006.01)

(52) **U.S. Cl.**

CPC ***C25D 1/003*** (2013.01); ***C25D 17/12*** (2013.01); ***B33Y 70/00*** (2014.12); ***C25D 3/38*** (2013.01); ***C25D 3/22*** (2013.01); ***C25D 3/40*** (2013.01); ***B33Y 30/00*** (2014.12); ***C25D 3/12*** (2013.01); ***C25D 3/20*** (2013.01); ***C25D 3/24*** (2013.01); ***C25D 21/12*** (2013.01); ***C25D 3/44*** (2013.01); ***C25D 3/46*** (2013.01); ***C25D 5/04*** (2013.01); ***C25D 5/10*** (2013.01); ***C25D 9/02*** (2013.01); ***B33Y 10/00*** (2014.12); ***B33Y 50/02*** (2014.12); ***C25D 15/00*** (2013.01)

(57) **ABSTRACT**

An apparatus and method for electrochemically depositing a unitary layer structure using a reactor configured to contain an electrolyte solution with an anode array containing a plurality of independently electrically controllable anodes arranged in a two-dimensional array, a cathode, an addressing circuit for receiving a signal containing anode address data and for outputting a signal causing an anode array pattern; and, a controller. in communication with the addressing circuit and the anode array, configured to electrically control each anode in the anode array to cause an electrochemical reaction at the cathode that deposits a unitary layer structure according to the anode array pattern signal.

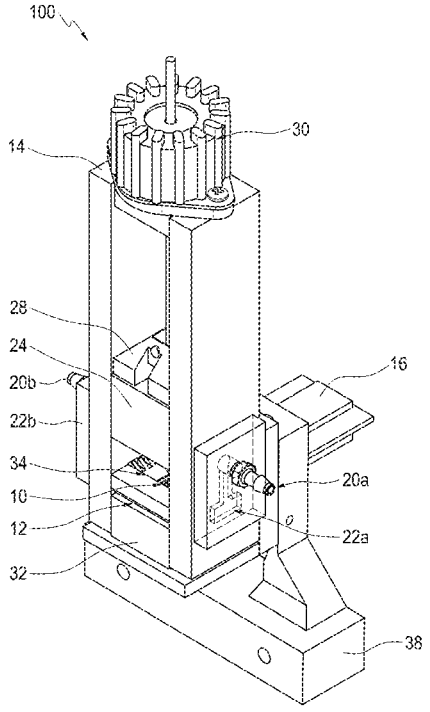

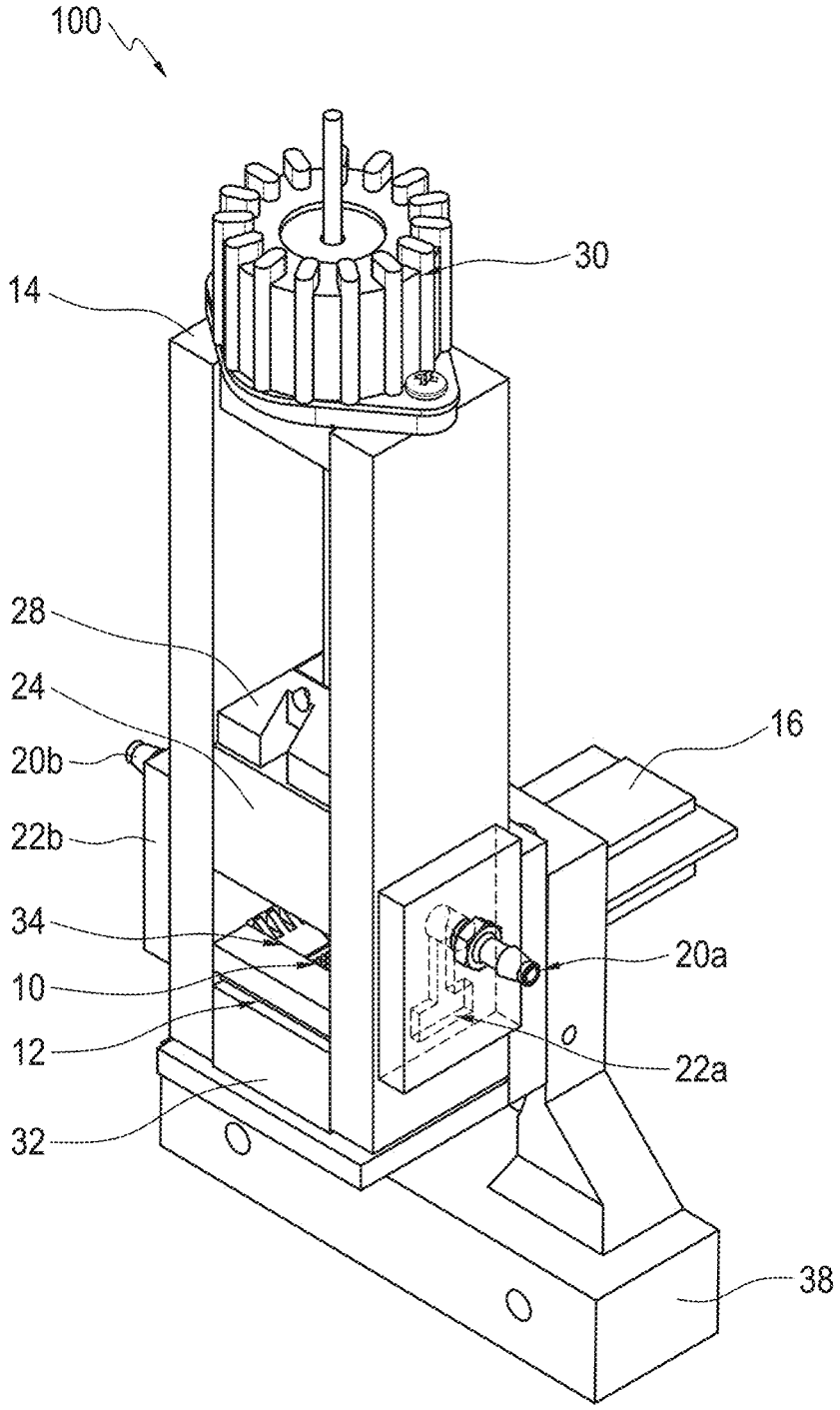

FIG. 1

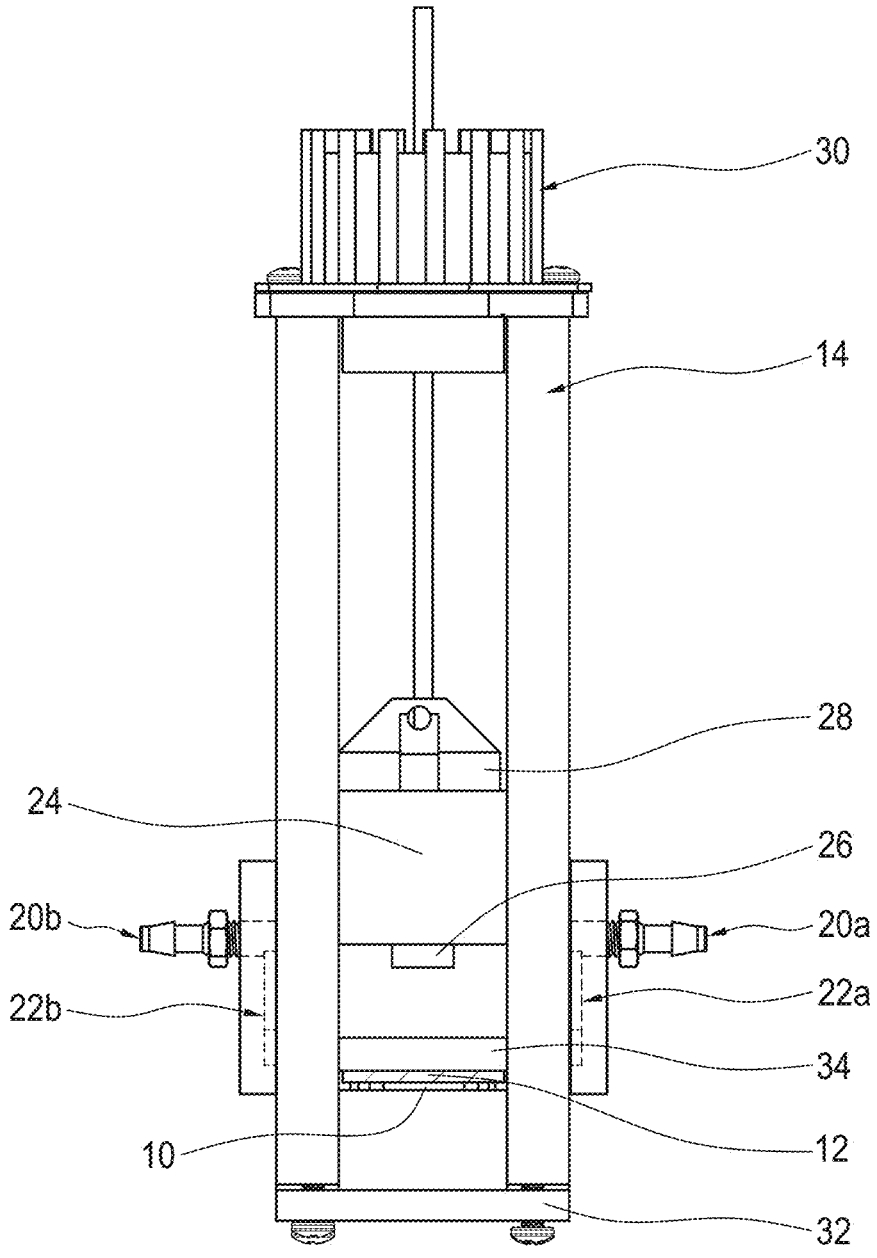

FIG. 2

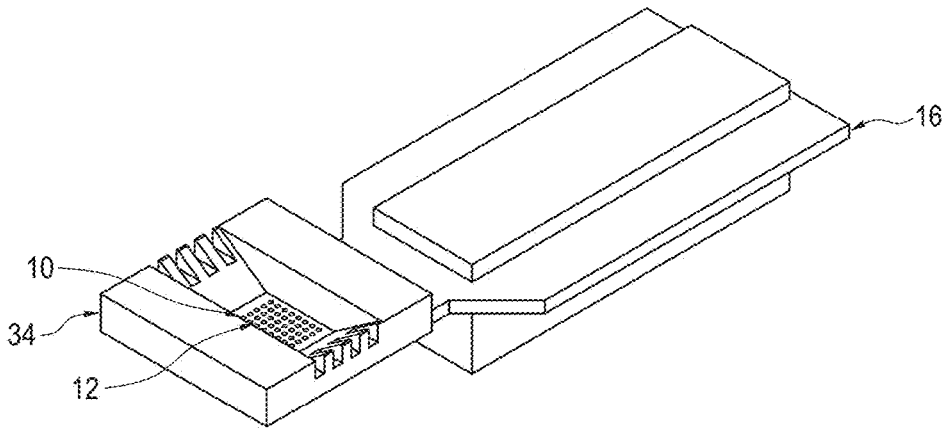

FIG. 3

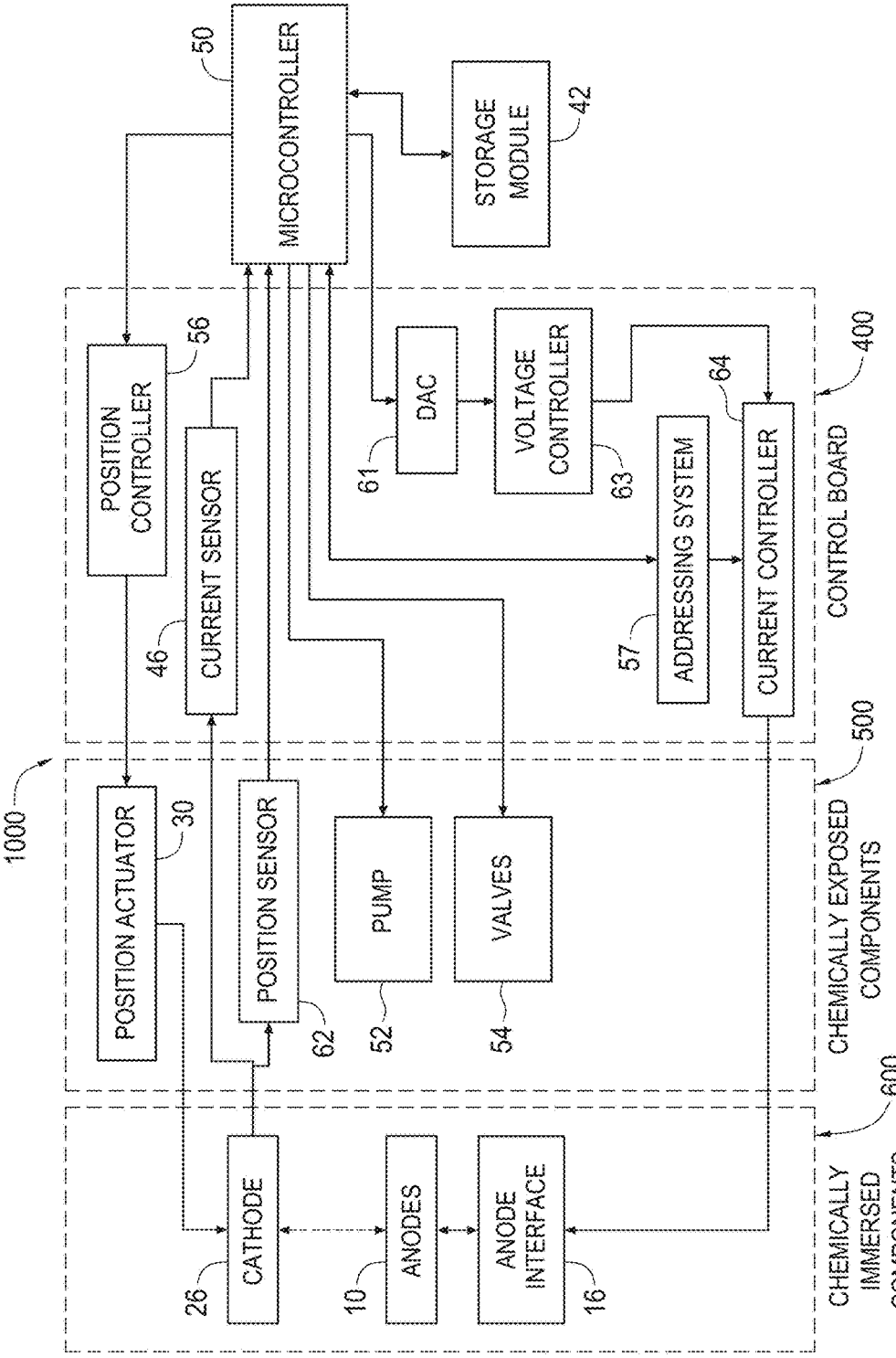
1000
MICROCONTROLLER
50
STORAGE MODULE
42
POSITION CONTROLLER
56
CURRENT SENSOR
46
DAC
61
VOLTAGE CONTROLLER
63
ADDRESSING SYSTEM
57
CURRENT CONTROLLER
64
400
CONTROL BOARD
POSITION ACTUATOR
30
POSITION SENSOR
62
PUMP
52
VALVES
54
500
CHEMICALLY EXPOSED COMPONENTS
CATHODE
26
ANODES
10
ANODE INTERFACE
16
600
CHEMICALLY IMMERSED COMPONENTS

FIG. 4

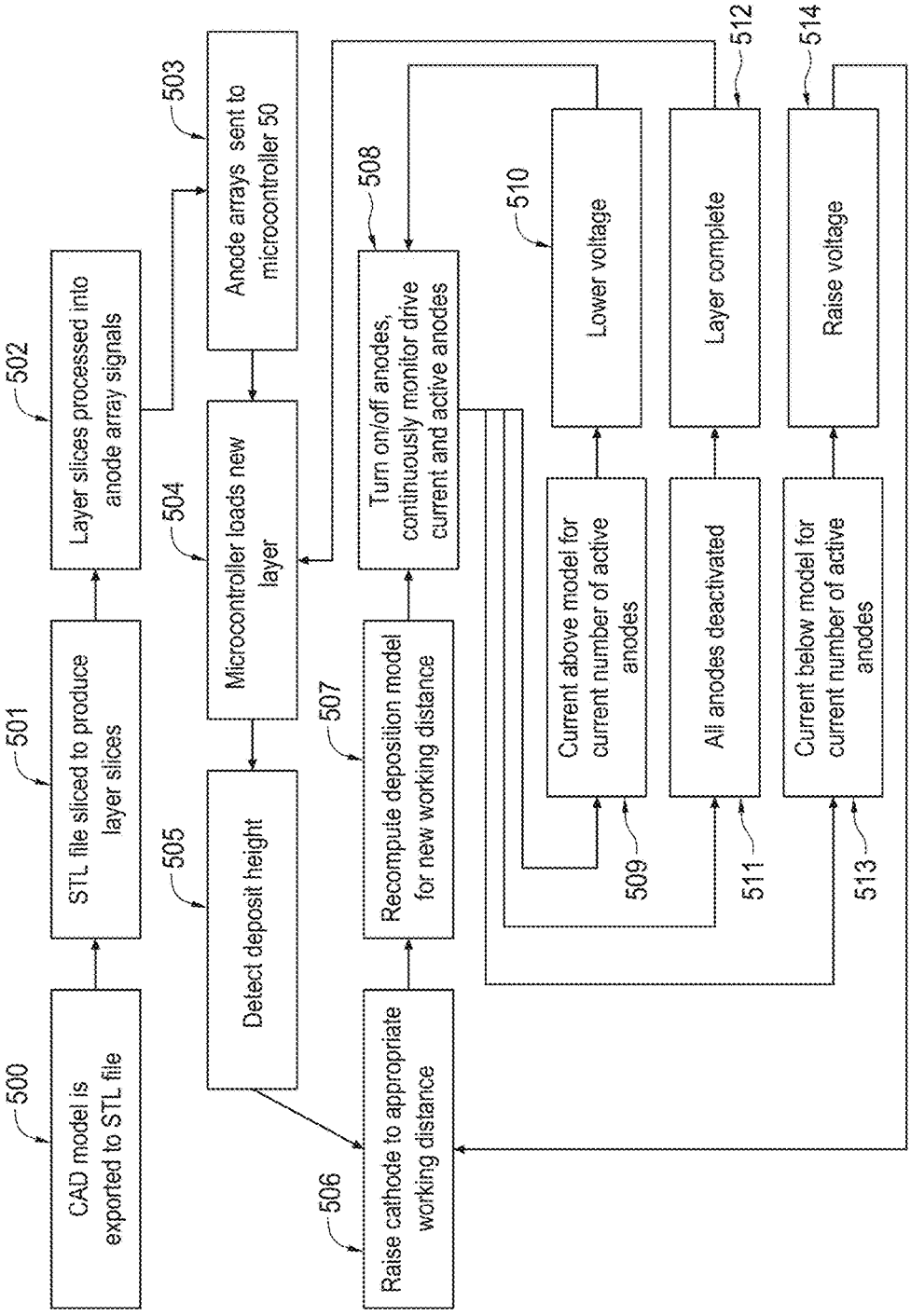
500
CAD model is exported to STL file
501
STL file sliced to produce layer slices
502
Layer slices processed into anode array signals
503
Anode arrays sent to microcontroller 50
504
Microcontroller loads new layer
505
Detect deposit height
506
Raise cathode to appropriate working distance
507
Recompute deposition model for new working distance
508
Turn on/off anodes, continuously monitor drive current and active anodes
509
Current above model for current number of active anodes
510
Lower voltage
511
All anodes deactivated
512
Layer complete
513
Current below model for current number of active anodes
514
Raise voltage

FIG. 5

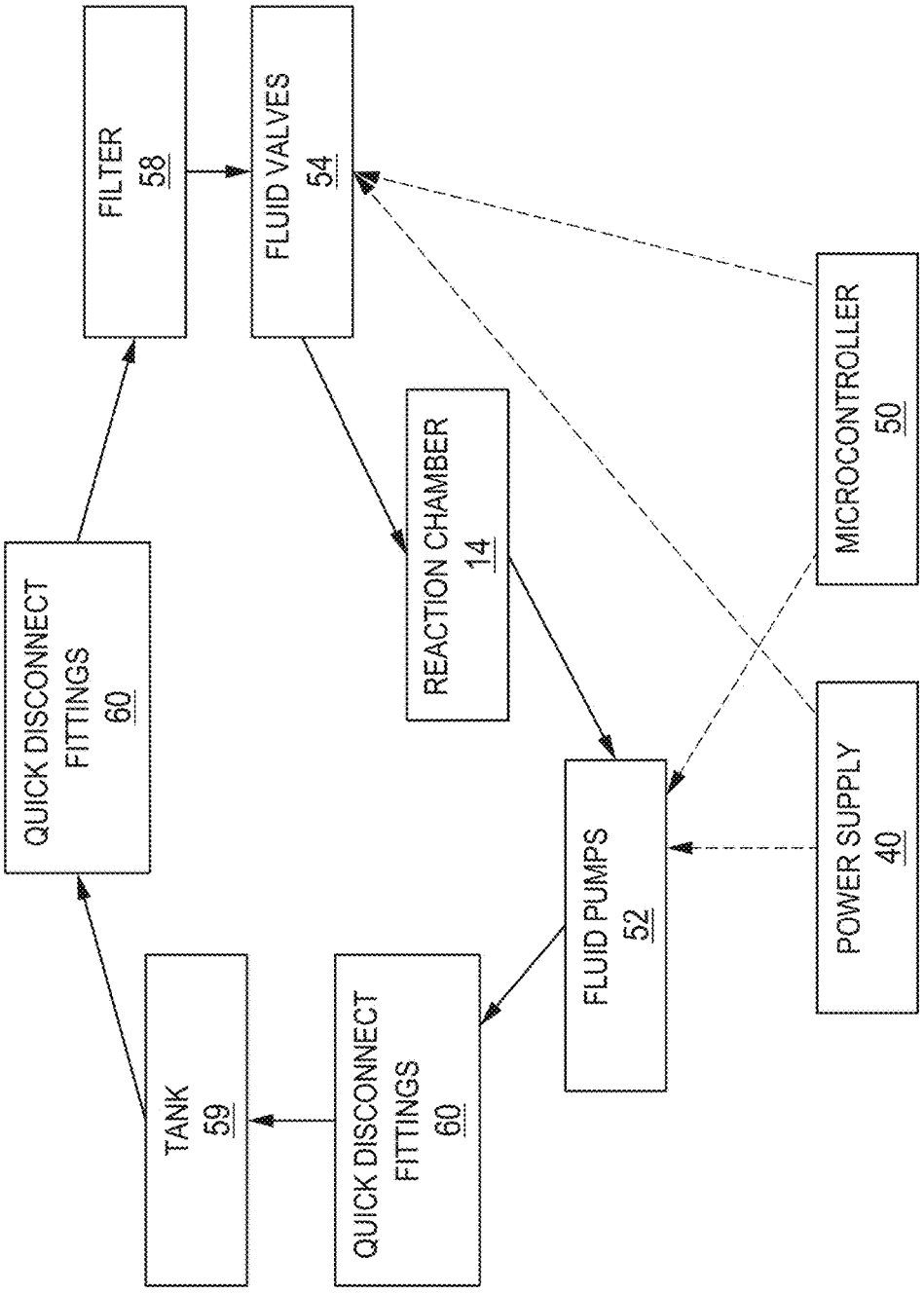
FILTER
58
FLUID VALVES
54
MICROCONTROLLER
50
REACTION CHAMBER
14
QUICK DISCONNECT
FITTINGS
60
FLUID PUMPS
52
POWER SUPPLY
40
TANK
59
QUICK DISCONNECT
FITTINGS
60

FIG. 6

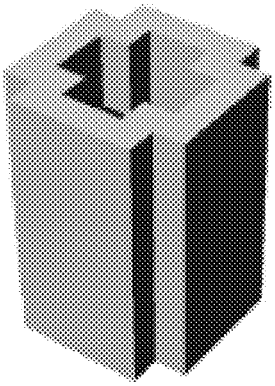

Fig. 7A

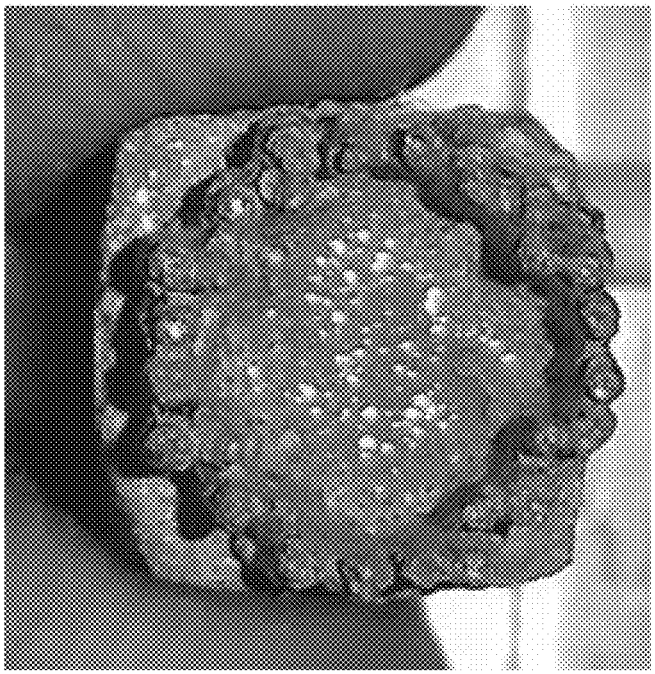

Fig. 7B

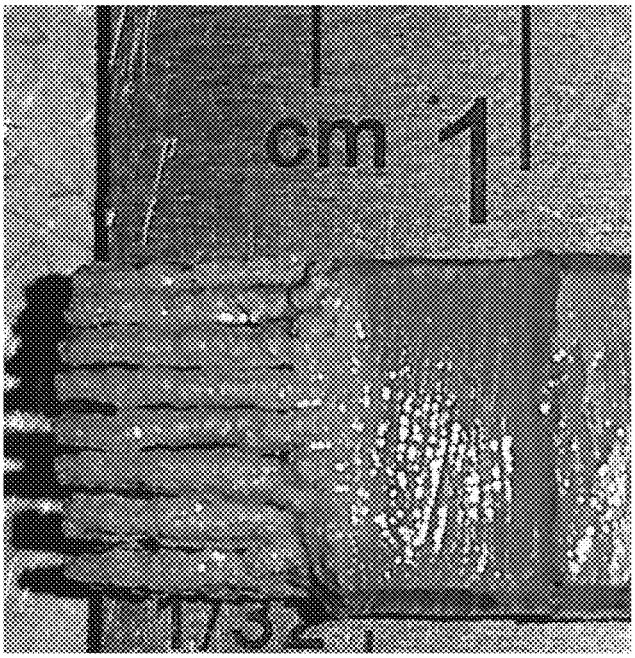

Fig. 7C

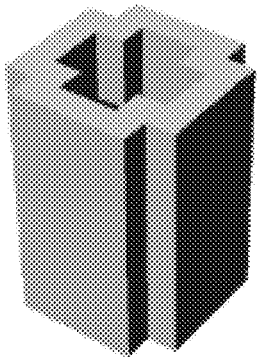

Fig. 8A

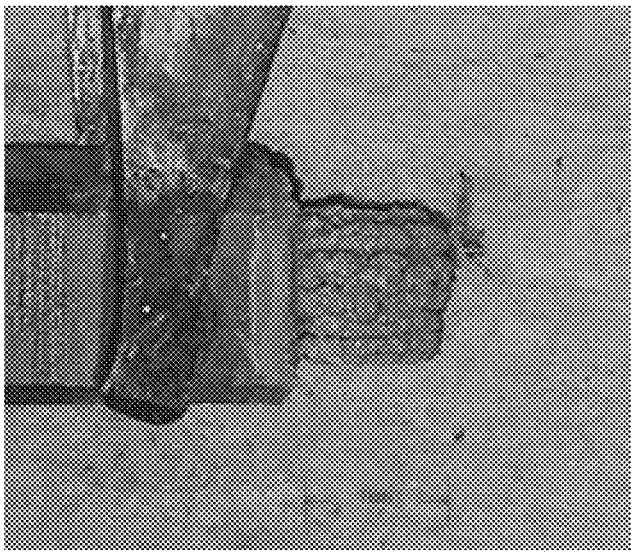

Fig. 8B

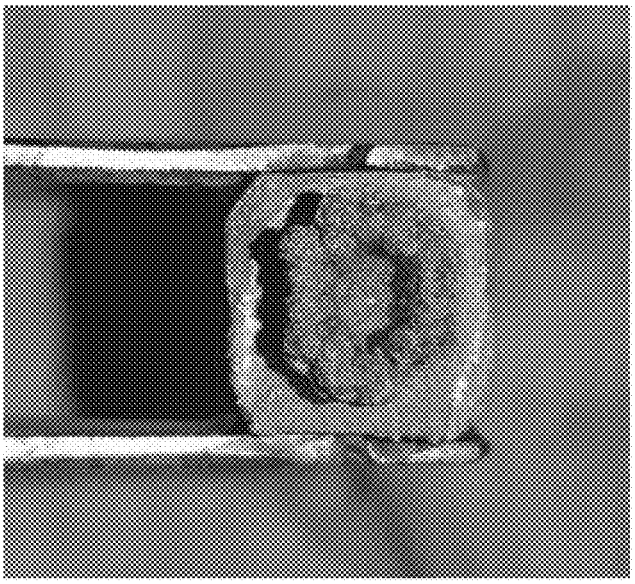

Fig. 8C

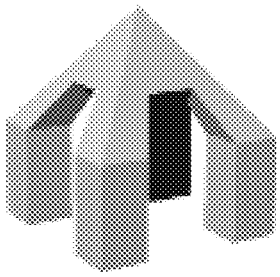

Fig. 9A

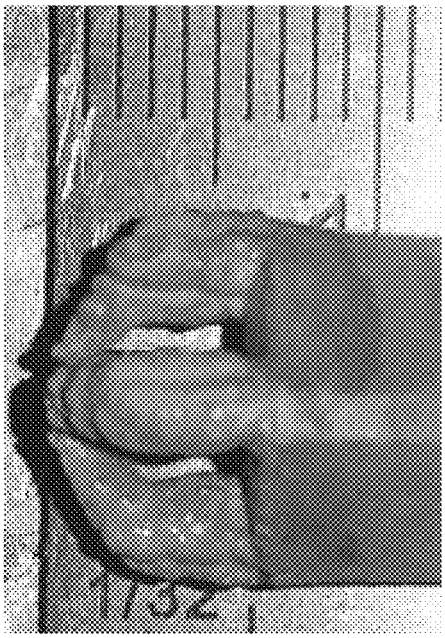

Fig. 9B

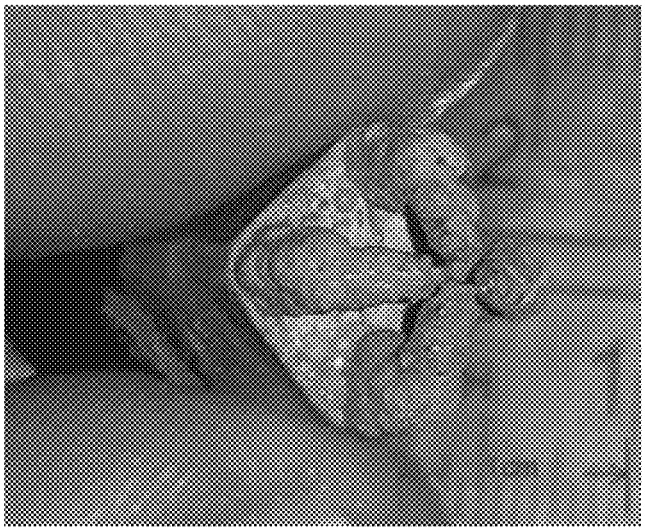

Fig. 9C

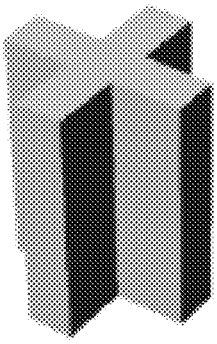

Fig. 10A

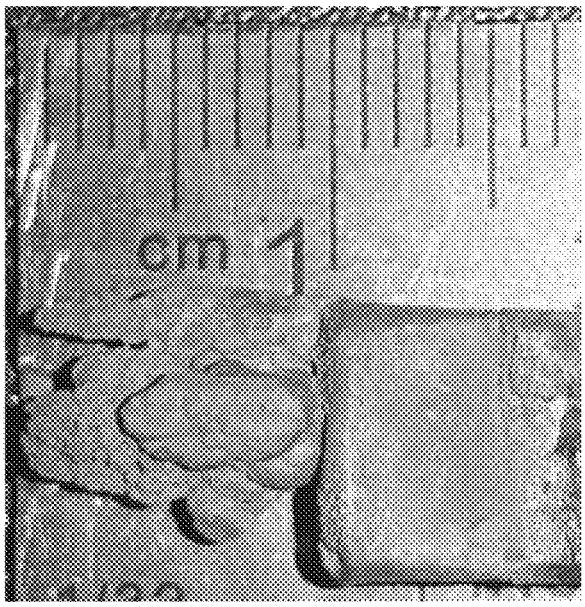

Fig. 10B

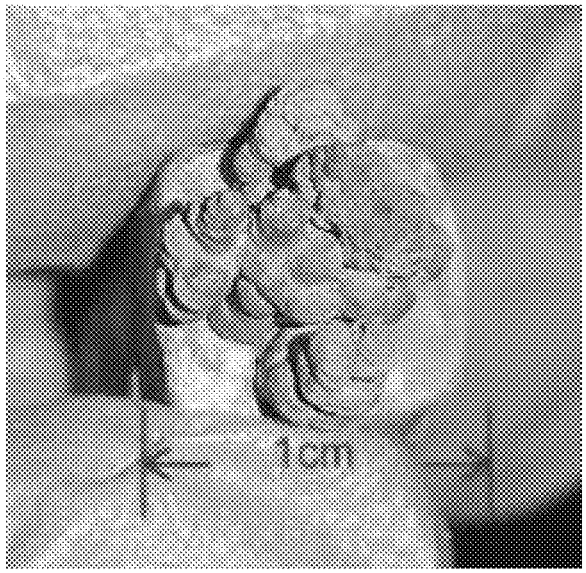

Fig. 10C

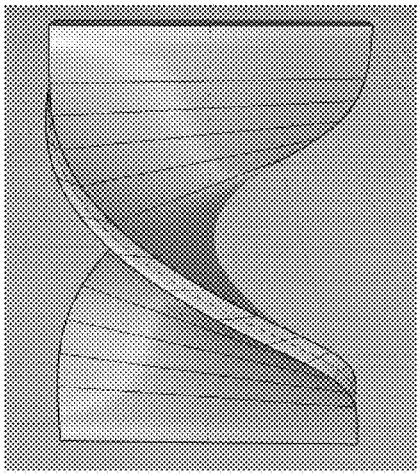

Fig. 11A

Fig. 11B

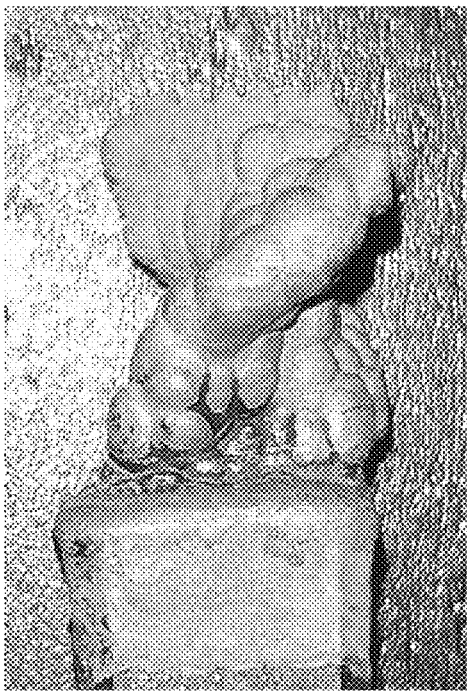

Fig. 11C

ELECTROCHEMICAL LAYER DEPOSITION BY CONTROLLABLE ANODE ARRAY

CROSS REFERENCE TO RELATED APPLICATIONS

[0001] This application claims priority to U.S. patent application Ser. No. 15/356,210, entitled "Apparatus for Electrochemical Additive Manufacturing," filed on Nov. 18, 2016, and now U.S. Pat. No. _____. This application also claims priority to U.S. Provisional Patent Application No. 62/257,333, entitled "Apparatus for Production of Three-Dimensional Metal Objects by Stereo-Electrochemical Deposition", filed on Nov. 19, 2015, fully incorporated by reference herein. This application is also related to U.S. patent application Ser. No. 15/415,246, entitled "Three Dimensional Additive Manufacturing Of Metal Objects By Stereo-Electrochemical Deposition," filed on Nov. 18, 2016, now U.S. Pat. No. 9,777,385 B2, which also claims priority to U.S. Provisional Patent Application No. 62/257,333, entitled "Apparatus for Production of Three-Dimensional Metal Objects by Stereo-Electrochemical Deposition", filed on Nov. 19, 2015.

TECHNICAL FIELD

[0002] The present disclosure relates to an apparatus, a system and a method for electrically depositing conductive material from a metal salt solution (hereinafter referred to as an electrolyte or ionic solution) on the cathode to form multiple layers using a two-dimensional array of anodes to fabricate large three dimensional metal structures.

BACKGROUND

[0003] Additive manufacturing, also known as 3D Printing, is used for the production of complex structural and functional parts via a layer-by-layer process, directly from computer generated CAD (computer aided drafting) models. Additive manufacturing processes are considered additive because conductive materials are selectively deposited on a substrate to construct the product. Additive manufacturing processes are also considered layered meaning that each surface of the product to be produced is fabricated sequentially.

[0004] Together, these two properties mean that additive manufacturing processes are subject to very different constraints than traditional material removal-based manufacturing. Multiple materials can be combined, allowing functionally graded material properties. Complicated product geometries are achievable, and mating parts and fully assembled mechanisms can be fabricated in a single step. New features, parts, and even assembled components can be "grown" directly on already completed objects, suggesting the possibility of using additive manufacturing processes for the repair and physical adaptation of existing products. Structural and functional parts created by additive manufacturing processes have numerous applications in several fields including the biomedical and aerospace industries. Traditional milling and welding techniques do not have the spatial resolution to create complex structural parts that can be achieved through additive manufacturing

[0005] However, electrochemical additive manufacturing (ECAM) techniques in general have several limitations such as choice of material, porosity, strength, scalability, part errors, and internal stresses. A deposition process must be developed and tuned for each material, and multiple material and process interactions must be understood. Resulting products may be limited by the ability of the deposited material to support itself and by the (often poor) resolution and accuracy of the process, Widespread use of additive manufacturing techniques may be limited due to the high cost associated with selective laser melting (SLM) and electron beam melting (EBM) systems. Further, most additive manufacturing devices currently in the industry use powdered metals which are thermally fused together to produce a part, but due to most metals' high thermal conductivity this approach leaves a rough surface finish because unmelted metal powder is often sintered to the outer edges of the finished product.

[0006] Challenges associated with the use of the ECAM processes in commercial systems also include the slow speed of deposition with a single anode, and small (micrometer) size of parts producible by a conventional ECAM method. Microstructures such as metal pillars have been produced using localized electrochemical deposition (LECD) process with a single anode, which is similar to ECAM, but is limited in scope to the fabrication of simple continuous features.

[0007] The stereo-electrochemical deposition (SED) process, an extension of the ECAM process, combines two technologies: stereo-lithography and electroplating. By inducing an electric field between the anode and the cathode, and passing metal salts between the electrodes, it is possible to produce metal parts at the cathode rapidly at room temperature. Since the path of the electric field is dependent on the geometry of the part being built, printing of extreme overhang angles approaching 90 degrees without the need for a support structure, is possible.

[0008] The SED process is capable of depositing most conductive materials including metals, metal alloys, conducting polymers, semiconductors, as well as metal matrix composites and nanoparticle-impregnated materials. Electroplating and electroforming techniques have established the capability of electrochemical processes to deposit metals over large areas, but localizing the deposition to a controlled area has presented a challenge.

[0009] The SED process has the potential to cheaply and quickly produce both metals and composite metal/polymer systems because it is a non-thermal process requiring relatively few moving parts and no expensive optical or high vacuum components. Additionally, the material is deposited atom by atom resulting in good micro-structural properties (such as porosity, grain size, and surface finish) which can be controlled electronically. These characteristics allow the SED process to create certain three dimensional geometries much faster, and with higher quality than conventional methods.

BRIEF DESCRIPTION OF THE DRAWINGS

[0010] Advantages of the subject matter claimed will become apparent to those skilled in the art upon reading this description in conjunction with the accompanying drawings, in which like reference numerals have been used to designate like elements, and in which:

[0011] FIG. **1** is a perspective view of the reactor for stereo-electrochemical deposition of layers of metallic material to fabricate a structure.

[0012] FIG. **2** is a front view of the reactor for stereo-electrochemical deposition of layers of metallic material to fabricate a structure.

[0013] FIG. **3** is a perspective view of the anode array and the controller board of the reactor for stereo-electrochemical deposition of layers of metallic material to fabricate a structure.

[0014] FIG. **4** is a block diagram of the components of the process of stereo-electrochemical deposition of layers of metallic material to fabricate a structure.

[0015] FIG. **5** is a block diagram of the process flow for stereo-electrochemical deposition of layers of metallic material to fabricate a structure.

[0016] FIG. **6** is a block diagram of the chemical pumping and handling system for stereo-electrochemical deposition of layers of metallic material to fabricate a structure.

[0017] FIG. **7**A is a 3D model of a structure to be fabricated by stereo-electrochemical deposition of layers of metallic material.

[0018] FIG. **7**B is a top view of a structure fabricated by stereo-electrochemical deposition of layers of metallic material.

[0019] FIG. **7**C is a side view of a structure fabricated by stereo-electrochemical deposition of layers of metallic material.

[0020] FIG. **8**A is a 3D model of a structure to be fabricated by stereo-electrochemical deposition of layers of metallic material.

[0021] FIG. **8**B is a side view of a structure fabricated by stereo-electrochemical deposition of layers of metallic material.

[0022] FIG. **8**C is a top view of a structure fabricated by stereo-electrochemical deposition of layers of metallic material.

[0023] FIG. **9**A is a 3D model of a structure to be fabricated by stereo-electrochemical deposition of layers of metallic material.

[0024] FIG. **9**B is a side view of a structure fabricated by stereo-electrochemical deposition of layers of metallic material.

[0025] FIG. **9**C is a top view of a structure fabricated by stereo-electrochemical deposition of layers of metallic material.

[0026] FIG. **10**A is a 3D model of a structure to be fabricated by stereo-electrochemical deposition of layers of metallic material.

[0027] FIG. **10**B is a side view of a structure fabricated by stereo-electrochemical deposition of layers of metallic material.

[0028] FIG. **10**C is a top view of a structure fabricated by stereo-electrochemical deposition of layers of metallic material.

[0029] FIG. **11**A is a 3D model of a structure to be fabricated by stereo-electrochemical deposition of layers of metallic material.

[0030] FIG. **11**B is a side view of a structure fabricated by stereo-electrochemical deposition of layers of metallic material.

[0031] FIG. **11**C is a side view of a structure fabricated by stereo-electrochemical deposition of layers of metallic material.

DETAILED DESCRIPTION OF THE INVENTION

[0032] Embodiments of the present invention relate to a controlled stereo-electrochemical deposition (SED) reactor and process performed upon a cathode to create centimeter-scale three dimensional metal objects via electrodeposition of multiple layers using an array of computer controlled anodes and a cathode. The materials are deposited layer by layer in "slices" on the cathode to produce the desired three-dimensional structures. In some embodiments the plurality of anodes are selectively movable, in other embodiments, the cathode is selectively moveable, and in other embodiments, both are moveable relative to each other.

[0033] The system for stereo-electrochemical deposition of metal objects comprises a chemical reactor, a chemical pumping and handling system, and an electrical control system. Each of these systems is described in detail below.

[0034] FIGS. **1** and **2** illustrate an embodiment of the chemical reactor for SED of metal objects. Reactor **100** generally includes a chemical reaction chamber **14** configured to contain an electrolyte, or ionic solution, that is used for the stereo-electrochemical deposition of layers of metal to fabricate a structure. During the deposition process, electrolyte is continuously supplied to chamber **14**. The electrolyte flows through chamber **14** and is collected for disposal or recycling. Chamber **14** is disposed on a structural support **38**, which may be made of metal or plastic or other suitable materials known to those of ordinary skill in the art. In an embodiment, a linear actuator **30** to control the movement of cathode **26** is disposed on chamber **14** on the side opposite to where structural support **38** is located.

[0035] In one embodiment, chamber **14** is rectangular in cross-section and is made of a chemical resistant polymer material, glass, or other chemically-resistant metal, plastic or ceramic material capable of containing the solution. In an alternate embodiment, chamber **14** may be circular or another geometry in cross-section, composed of glass or an alternate chemical resistant polymer, metal or ceramic material capable of containing the solution. Persons of ordinary skill in the art would understand however that chamber **14** may have be configured according to many different designs suitable to carry out the SED process according to the invention. Conventional reactor design considerations would apply to the geometry, size and materials of construction.

[0036] Chamber **14** is provided with an inflow fluid port **20***a* to allow fresh electrolyte from the chemical pumping and handling system to enter chamber **14**. Chamber **14** is also fitted with an outflow fluid port **20***b* to allow the used electrolyte to exit chamber **14** into a waste handling or recycling system (not shown). In other embodiments, chamber **14** may be fitted with a plurality of inflow fluid ports and outflow fluid ports. The inflow and outflow ports may be positioned on the same side wall of chamber **14**, or they may be positioned on different side walls of chamber **14**, or may be included as part of the design of the anode or the cathode assemblies.

[0037] Electrolyte from tank **59** is pumped into chamber **14** by fluid pump **52** (FIG. **6**) through the inflow fluid port **20***a*. Fluid port **20***a* is disposed on a fluid flow guide **22***a*. In an embodiment, fluid ports connect the chamber to the rest of the chemical pumping and handling system components (pump, quick disconnect fittings, valves, tank, etc.). In an embodiment, fluid flow guide **22** is disposed on the side

walls of chamber **14** to direct the flow of the electrolyte to the fluid guide vanes **34** and anode array **10**.

[0038] As illustrated in FIG. **3**, anode array **10** is disposed on fluid guide vanes **34**. Anode array **10** is completely submerged in the electrolyte during the operation of the SED process. Fluid guide vanes **34** provide compressive force between the anode array **10**, the gasket **12**, and the anode flange **32**. Fluid guide vanes **34** also direct the flow of the electrolyte over anode array **10**, laminarizing the flow over the anodes to provide for even deposition of metal layers according to the invention. During the operation of the system, electrolyte is pumped into the chamber as described above, and pumped out of chamber **14** through flow guides **22***b* and the outflow fluid port **20***b* into a waste or recycling system.

[0039] As illustrated in FIG. **3**, anode array **10** is positioned within fluid guide vanes **34** of chamber **14** of the reactor **100**. In an embodiment, anode array **10** may have a rectangular shape with a plurality of elements that define a pattern of arrangement of the individual anode elements responsible for depositing metal layers in desired shapes. Anode array **10** may be made of a combination of plastic, ceramic, polymer, refractory or transition metal, semiconductor, carbon, and/or dielectric material. In other embodiments, array **10** may have different geometric designs to connect individual anodes in different patterns such as rectangular, circular, hexagonal, or oval. Within the anode array, multiple insulated anode conductive elements made of platinum or another conductive substance are generally disposed on and secured to the overall anode array **10**. In an embodiment, each individual exposed anode element of anode array **10** is made of platinum wire.

[0040] In FIG. **3**, an anode array interface board **16** is electrically coupled to array **10** to provide electrical power to array **10** through conventional ribbon cables or other suitable connection means known in the art. Anode array interface board **16** also receives current and voltage information from cathode **26** through the current sensor **46** and the voltage controller **63** both embedded in the control board **400** (FIG. **4**). Board **16** accepts electronic information as well as electrodeposition power (current) in a corresponding fashion to the anode array patterns dictated by addressing system **57** and current controller **64** respectively (FIG. **4**). In other embodiments, some or all of the functions of the control board **400** may be integrated into the anode interface board **16**.

[0041] In other embodiments, a printed circuit board with the same pattern of openings as anode array **10** may be used to connect each of the anode elements to a power source. In an embodiment, array **10** comprises 64 dimensionally stable platinum anodes made from 24-gauge (0.5 mm diameter) 3 mm long platinum wire, such as, for example, 95% Pt 5% Ru wire. Anode elements of the anode array **10** are secured into fitted vias in anode array interface board **16**. In an embodiment, anode array interface board **16** is built on a FR4 2.0 mm thick double-sided PCB Board fabricated with 0.3 mm trace width.

[0042] As illustrated in FIGS. **1-3**, gasket **12** is disposed between array **10** and fluid guide vanes **34**, to contain the electrolyte in the chemical reactor and prevent leaks. In an embodiment, gasket **12** is made from a chemically resistant elastomeric polymer. In an embodiment, an anode flange **32** is disposed underneath the anode array **10**. In an embodiment, anode array **10** is secured by screws on the bottom to chamber **14**, and these screws are tightened to provide clamping force to compress gasket **12**. In another embodiment, the clamping force is provided by other mechanical devices, such as spring tension, or a full-length threaded rod which exert force on the chamber **14** downward towards the anode array **10** to compress gasket **12** between the anode array **10** and the bottom of chamber **14**. In other embodiments not shown in FIGS. **1-3**, the anode array may be coupled to an electro-mechanical positioning system so that the position of the anode array relative to the cathode may be changed according to the desired position for the metal layer deposition step of the fabrication.

[0043] Referring again to FIGS. **1-3**, a cathode **26** comprising one or more cathodic conductive materials is disposed within chamber **14** and is spaced from anode array **10**. In an embodiment, cathode **26** may be disposed above anode array **10**. In an embodiment, cathode **26** comprises a 9×9 mm square graphite rod with a polished anode-facing end. Cathode **26** is attached to the anode-facing surface of cathode slider **24**. Cathode slider **24** mechanically fixes the position of cathode element **26** within chamber **14** during operation of the system and deposition method and houses a chemically resistant electrical connection between the cathode and control board **400**. In an embodiment, cathode slider **24** is made of plastic, for example, polypropylene with an electrical contact made of chemically resistant conductive material, for example titanium, chromium-alloy, stainless steel, or carbon. A cathode slider linkage **28** connects the cathode slider **24** to the linear actuator **30** which controls the movement of cathode slider **24** within chamber **14**.

[0044] In an embodiment, in which the cathode can be selectively positioned relative to the anode array, the distance between cathode **26** and anode array **10** is controlled by movement of the cathode slider **24**. In an embodiment, cathode slider **24** is driven by a position actuator **30**, which is controlled by a position controller **56** located on the control board **400** (FIG. **4**). In an embodiment, position actuator **30** may be a non-captive leadscrew stepper motor such as, for example, Haydon Kerk Motion Solutions, Inc.'s switch and instrument stepper motor. In an embodiment, position controller **56** may be a stepper motor driver such as, for example, a Pololu Corporation's A4988 stepper motor driver. The position of cathode **26** within chamber **14** is detected through a cathode position sensor **62** (not shown) located near the top of chamber **14**, and is communicated to microcontroller **50** (FIG. **4**.) In an embodiment, cathode position sensor **62** may be a mechanical waterproof microswitch such as, for example, a Yueqing Dongnan Electronics Co., Ltd. WS1 Waterproof Micro Switch **5**A

[0045] FIG. **4** illustrates the level of chemical exposure of various components of the SED system **1000**. SED system **1000** comprises chemically exposed components module **500**, chemically immersed components module **600**, and a control module **400**. Chemically immersed components of module **600** should be composed of engineered plastics (such as PET, PP, FEP, PTFE, certain epoxies, etc.), noble metals, certain carbon compounds, or other highly chemical resistant materials. Chemically exposed components of module **500** should be waterproof and have no exposed solder or metal parts except stainless steel. Components of the control module **400** are not exposed to chemicals and do not need to be made of chemical resistant materials.

[0046] FIG. **4** also illustrates the operation of the electrical control system **1000** which enables stereo-electrochemical

deposition of layers of metallic material according to an embodiment of the invention. Control board **400** provides regulated power to all electromechanical components of the reactor for the SED process (such as the pump, the stepper motor and the stepper motor driver), as required by the software configuration of the system and the Multiple Independently Controlled Anode (MICA) algorithm.

[0047] As illustrated in FIG. **4**, microcontroller **50** interfaces with a storage module **42** to receive machine configuration information and layer slice data. Storage module **42** may be a personal computer or any device capable of storing and passing layer slice data to the microcontroller **50**. In an embodiment, the storage module **42** is composed of a Secure Digital card reader and card. In another embodiment, the storage module **42** is composed of a serial interface to a personal computer which delivers layer files to the microcontroller **50**.

[0048] Some example computer devices include desktop computers, portable electronic devices (e.g., mobile communication devices, smartphones, tablet computers, laptops) such as the Samsung Galaxy Tab®, Google Nexus devices, Amazon Kindle®, Kindle Fire®, Apple iPhone®, the Apple iPad®, Microsoft Surface®, the Palm Pre™, or any device running the Apple iOS®, Android® OS, Google Chrome® OS, Symbian OS®, Windows Mobile® OS, Windows Phone, BlackBerry® OS, Embedded Linux, Tizen, Sailfish, webOS, Palm OS® or Palm Web OS®.

[0049] In an embodiment, microcontroller **50** may be an Arduino Mega microcontroller board. Microcontroller **50** receives electronic input corresponding to the position of cathode **26** from cathode position sensor **62**. Microcontroller **50** receives electronic input from current sensor **46** corresponding to the total deposition current flowing through the cathode element. Using this electronic input, microcontroller **50** determines through computations whether to move the cathode, increase or decrease voltage to the anode elements, or turn various anode elements on or off in order to facilitate accurate and speedy deposition of the current layer slice.

[0050] Microcontroller **50**, in an embodiment, directs the operation of the cathode z-axis position controller **56** based on information received from the current sensor **46**, from the position sensor **62**, and based on the active/inactive state of each anode in the addressing system **57**. This information is used by the MICA software algorithm running on microcontroller **50** to determine the appropriate cathode z-axis position of cathode **26**. Cathode position controller **56** controls the movement of linear actuator **30** which is mechanically linked to, and moves, cathode **26** via cathode slider linkage **28** and cathode slider **24** inside chamber **14**, as was described above. (FIGS. **1** and **2**).

[0051] Microcontroller **50** controls the operation of fluid pump **52** and valves **54** to direct the flow of the electrolyte solution through chamber **14** of the reactor **100**. In an embodiment, valves **54** comprise electrically actuated, chemically resistant solenoid valves. In an embodiment, the fluid pumping speed may be varied at regular intervals to clear out bubbles which may have formed on the anode after a length of time of steady state deposition. In another embodiment, the fluid pumping speed may be kept at a steady rate and ultrasonic agitation may be provided into the reaction chamber **14** in order to clear out bubbles.

[0052] Anode array **10** is controlled by microcontroller **50** through an addressing system **57**, which in turn supplies data to the current controller **64**. The source voltage to the current controller **64** is also adjusted continuously by microcontroller **50** through a voltage controller **63** which receives an analog signal from the microcontroller **50** through the Digital-to-Analog converter (DAC) **61**. According to embodiments of the invention, current controller **64** may be a NPN or PNP transistor, a Sziklai Pair compound transistor comprising one NPN transistor and one PNP transistor, a n/p-channel Field Effect Transistor (FET), or any device which has the ability to deactivate or limit the current flowing to individual anodes in the anode array when the current exceed a certain threshold limit.

[0053] In an embodiment, the addressing system **57** may be a shift register or latching circuit composed of one or more transistors, serial-in/parallel-out (SIPO), parallel-in/serial-out (PISO) or other addressing components which convert a multiplexed digital signal into a de-multiplexed digital or analog signal. In an embodiment, the voltage controller **63** may be a Linear Technologies LM317 adjustable linear voltage controller, buck, boost or single-ended primary-inductor converter (SEPIC) converter, or any adjustable voltage power supply of sufficient current capacity to supply all anode elements of anode array **10**. In an embodiment, DAC **61** is composed of a LC or RC filter circuit intended to convert digital PWM signals from the microcontroller into an analog input for the voltage controller **63**. In other embodiments, DAC **61** may be omitted if a digital voltage controller **63** is used.

[0054] The metal deposition model according to the present invention is derived from Faraday's first and second laws of electrolysis. The amount of chemical change produced by current at an electrode-electrolyte boundary is proportional to the quantity of electricity used. The amounts of chemical changes produced by the same quantity of electricity in different substances are proportional to their equivalent weights.

[0055] These laws can be expressed as the following formula:

$$m = \left(\frac{Q}{F}\right)\left(\frac{M}{z}\right)$$

[0056] Where m is the mass of the substance liberated at an electrode in grams; Q is the total electric charge passed through the substance; F is Faraday's constant (96485 C/mol^{-1}); M is the molar mass of the substance in AMU (for example, for copper this value is 63.55); z is the valence of the ions of the substance (for example, for copper (II) sulfate this value is 2).

[0057] For variable electric current deposition (as utilized by SED) Q can be defined as:

$$Q = \int_0^t I(\tau)\,d\tau$$

where t is the total electrolysis time, and $I(\tau)$ is the electric current as a function of the instantaneous time tau τ. $d(\tau)$ is the computation time for each iteration of the algorithm.

[0058] Substituting mass for volume times density, and adding the integral charge for Q produces:

$$\rho V = \rho A d = \frac{\int_0^t Idt * M}{z * F}$$

[0059] Where p is the density of the material (8.96 g/cm^3^3 for copper); A is the area of a single deposit on the cathode (note: this is NOT the same as the anode area) d is the distance (z-height) of the deposited column of material.

[0060] Rearranging the equation and expanding the area term results in the following equation:

$$d = \frac{\int_0^t Idt * M}{zF\rho\pi(r_{eq})^2}$$

[0061] This equation gives a model for the z-height produced at a single circular anode pin as a function of deposition current, equivalent radius of the cathode deposit, and known physical and chemical constants.

[0062] The equivalent radius of a deposit produced on the cathode, R_{eq} is modeled as a function of the "throw angle" (λ), the working distance (dw) and the anode radius (r) which is approximated by the following function:

$$r_{eq}=r+d_w*\tan(\lambda)$$

[0063] According to an embodiment, the throw angle (λ) was empirically determined to best fit with observed results at 28° for a standard acid copper solution consisting of 900 g distilled water, 250 g copper sulfate pentahydrate, and 80 g sulfuric acid by weight. Those of ordinary skill will be able to determine the throw angle (λ) for other electrolytes and reactor configurations, if required.

[0064] Microcontroller **50** uses the above mathematical model to produce an overall process flow which compares the expected deposition rate on anode array **10** with the actual rate of deposition as detected by the cathode position sensor. In one embodiment, the expected deposition rate on anode array **10** is compared with the actual deposit height by "shorting" successive anodes in anode array **10** and raising the cathode to the next layer only when all anodes have been shorted. In an embodiment, the microcontroller **50** attempts to have the system for stereo-electrochemical deposition of layers of metallic materials to fabricate a structure by creating an even layer of metal deposits across each of the active anodes of anode array **10** by allowing the metal deposited material to grow from the cathode element **26** until the metal deposited material reaches anode array **10**. When the metal material deposited on the cathode element contacts the anode element, the metal material will short circuit cathode to anode. The current controller **64** detects the short circuit on each individual anode of anode array **10** and limits that individual anode's current to a predetermined value, or cuts off current to that individual anode element altogether. This information is detected by microcontroller **50** through the MICA algorithm by analyzing input from the current sensor **46**.

[0065] In an embodiment, the Multiple Independently Controlled Anodes (MICA) software performs the following steps:

[0066] 1. Detect deposit layer height (zero the cathode);

[0067] 2. Detect uneven deposits, adjust individual anode pulse-width modulation (PWM) to compensate;

[0068] 3. Raise cathode to appropriate working distance;

[0069] 4. Recalculate constants for new working distance and the of active anodes in the anode array;

[0070] 5. Begin printing layer with n active anodes;

[0071] 6. Sense total current;

[0072] 7. If current is below desired amperage as predicted by model, raise voltage;

[0073] 8. If current is above desired amperage, lower voltage;

[0074] 9. If current derivative is above threshold (possible short), return to step 2, above;

[0075] 10. If predicted deposit height exceeds threshold, return to step 1, above;

[0076] 11. Otherwise, run the Ziegler-Nichols method of tuning a proportional integral derivative controller (PID controller) to maintain anode deposition current at appropriate level—return to step 6.

[0077] FIG. **5** illustrates the logic flow process of the controlled stereo-electrochemical deposition according to the mathematical model described above. The overall process may be described as "deposit, verify, adjust, and repeat."

[0078] Typical process parameters for the SED process, in an embodiment, are listed below:

Parameter	Value
Voltage	Dynamically adjusted via Zieglar-Nichols PID (1.8-3.8 V)
Pulse period	DC
Electrolyte	Copper sulfate hexahydrate (250 g), Sulfuric acid (80 g), water (900 g)
Anode	64 Pt—Ru (95/5) pins (0.5 mm diameter)
Cathode	9 mm × 9 mm graphite block
Working distance	0.6-0.9 mm
Target deposition current	1.38-6.0 mA/pin (65-285 A/dm^2)

[0079] The process described above functions well for electrodeposition of two-dimensional objects and can be accomplished without any CAD, stereolithography modeling or slicing software.

[0080] However, in order to accomplish true three-dimensional (stereo)-electro deposition (SED) of functional parts, additional steps are required.

[0081] FIG. **5** depicts the process for SED of multiple layers to fabricate three dimensional structures according to an embodiment. In step **500**, a CAD model of the desired product is exported to a stereolithography (STL) file. In step **501**, the STL file is exported to an open source digital light projection (DLP)-based stereo-lithography (SLA) 3D printer controller (slicing) software application, to produce layer slices. In an embodiment, the slicing software may be Creation Workshop v1.0.0.13 from Envision Labs. In step **502**, layer slice information is processed into anode array signals by the slicing software. Layer slice information may be output as PNG files along with a descriptive G-code file with information regarding layer width and number of slices. In step **503**, anode array signals are sent to microcontroller **50**. A machine configuration file (.mcf) may be

created for microcontroller **50** to allow microcontroller **50** to determine the physical parameters of the controlled stereo-electrochemical deposition reactor.

[0082] In step **504**, microcontroller **50** loads new layer information based on layer slices received in step **503**. In step **505**, microcontroller **50** detects the deposit height of cathode **26** for deposition of the new layer of metallic material. During operation of the SED process, microcontroller **50** may detect any uneven deposits of new material and adjust the overall anode bias voltage to maintain target deposition rate.

[0083] In step **506**, microcontroller **50** adjusts the position of cathode **26** to an appropriate working distance from anode array **10** for deposition of the new layer of material. In step **507**, microcontroller **50** computes the parameters of the operation of the SED system based upon the new position of cathode **26** determined in step **506**. In step **508**, microcontroller **50** causes a layer to be deposited. Microcontroller **50** continuously monitors the drive current, bias voltage and active anodes of anode array **10** to maintain overall system efficiency.

[0084] As illustrated in steps **509** and **510**, if microcontroller **50** detects that the cathode current is above the target anode element amperage times the number of active anodes, voltage to entire anode array is lowered by microcontroller **50**, or microcontroller **50** deactivates anode elements as needed to eliminate shorted anode elements. As illustrated in steps **513** and **514**, if microcontroller **50** detects that the drive current is below the desired amperage as predicted by the model, voltage to the anode array is increased.

[0085] As illustrated in steps **511** and **512**, if microcontroller **50** detects that all anodes of anode array **10** have been deactivated, the deposition of the layer is deemed complete. The process returns to step **504** for deposition of the next layer, and repeats until the structure is completed.

[0086] FIG. **6**. illustrates an embodiment of the chemical pumping and handling subsystem which enables the stereo-electrochemical deposition process. A tank **59** is connected to the system through quick disconnect fittings **60** to route the flow of electrolyte to chamber **14** through filter **58** and valves **54**. The flow of electrolyte then returns through the pump **52** and another set of quick disconnect fittings **60** and returns to the tank **59** or to a waste management system. In an embodiment, a filter **58** may be used, such as, for example, a chemical resistant polypropylene T-strainer, 200 mesh from McMaster Carr (8680T21). The electrolyte is propelled through the system by fluid pump **52** such as HYCX 10inkpump-12 VDC. The flow of the electrolyte through the system is controlled using fluid valves **54**, which may be chemically resistant valves, such as, for example, Parker Series 1 Miniature Inert PTFE Isolation Valves. Microcontroller **50** controls the operation of pumps **52** and valves **54**. Power supply **40** provides the necessary power to run the system. In an embodiment, power supply **40** may be a Toshiba 15V 3.0 mm PA3283U-1ACA adapter/charger.

[0087] The following is a material selection guide which sets forth expected model compatibility, chemical prices, deposition rates and material properties for the various metals which could be deposited according to the embodiments of the invention:

	Models supported	Feedstock Price ($/kg metal ion eq.)	Deposition speed (% of Cu speed)	Electrical Conductivity (% of Cu)	Thermal Conductivity (% of Cu)	Melting Point (° C.)
Gold	All	Spot + 20%	25%	65%	83%	1064
Silver	All	Spot + 30%	10%	106%	106%	962
Zinc	All	$45	150%	29%	29%	420
Zn/Fe/Co/Ni Alloys	All	$50	10-35%	10-28%	5-20%	300-750
Copper	All	$50	100%	100%	100%	1085
Nickel	A1200-2500	$50	40%	22%	24%	1455
Tin	All	$50	15%	15%	17%	231
Pure Iron	All	$50	300%	17%	20%	1538
Stainless 316L	A1200-2500	$60	5-10%	2.5%	4%	1400
Aluminum	A1200-2500 w/Mods	$120	15%	60%	50%	660
Titanium	A1200-2500 w/Mods	$160	5-20%	4%	5%	1668
Polypyrrole	A1200-2500	$80	1-2%	0.000084%	0.05%	150
Tungsten Carbide MMC	A2500	$80	5-10%	8%	28%	2800
BNNT Reinforced 316L	A2500	$850	4-5%	1%	3%	1400
SGCNT/Cu Matrix	A2500	$550	90%	140%	110%	1085

[0088] Below is a list of potentially deposited materials and ranges of allowable, and preferred, process conditions for each deposit material, identifying the metals that can be deposited and the various reagents and additives used in the SED process for each deposit material. In the chemical compositions listed below, all compounds are assumed to be soluble in an aqueous solution:

[0089] Copper

[0090] Allowable chemicals/concentrations:

[0091] Copper sulfate, hexahydrous or anhydrous (0-350 g/L). Concentrations are for the hexahydrous case

[0092] Sulfuric acid (0-270 g/L)
[0093] Copper chloride (0-100 g/L)
[0094] Copper Fluoroborate (0-450 g/L)
[0095] Fluoroboric acid (0-30 g/L)
[0096] Boric acid (0-30 g/L)
[0097] Copper pyrophosphate (22-38 g/L) and corresponding salt: potassium or sodium pyrophosphate (150-250 g/L), as well as a source of nitrate (5-10 g/L) and ammonia ions (⅓ g/L).
[0098] Copper cyanide (15-75 g/L) and corresponding cyanide salts or Rochelle salt.
[0099] Allowable Additives
[0100] benzotriazole, cadmium, casein, cobalt, dextrin, dimethylamino derivatives, disul-fides, 1,8-disulfonic acid, disodic 3,3-dithiobispropanesulfonate, 4,5-dithiaoctane-1,8 disulfonic acid, dithiothreitol, ethylene oxide, gelatin, glue, gulac, lactose benzoylhydrazone, 2-mercaptoethanol, molasses, sulfonated petroleum, o-phenanthroline, polyethoxyether, polyethylene glycol, polyethylene imine, poly N,N0-diethylsaphranin, polypropylene ether, propylene oxide, sugar, thiocarbamoyl-thioalkane sulfonates, and thiourea.
[0101] Allowable Temperature range
[0102] 18° C.-60° C.
[0103] Allowable Voltage range
[0104] 0.2V-6V
[0105] Allowable Current range
[0106] 1.6 A/dm^2 to 260 A/dm^2
[0107] Preferred conditions for the SED process
[0108] Electroplating solution: Copper sulfate, 250 g/L (saturated solution at room temperature). Sulfuric acid 0-40 g/L.
[0109] Additives: Sodium dodecyl sulfate (SDS) 600 mg/L
[0110] Temperature: 25° C. (room temperature)
[0111] Voltage: 2.8-3.2V
[0112] Current: 200-500 A/dm^2, 75% duty cycle square wave

[0113] Nickel
[0114] Allowable Chemicals/concentrations:
[0115] Nickel sulfate, hexahydrous (225-400 g/L).
[0116] Boric acid (0-45 g/L)
[0117] Nickel Ammonium Sulfate (0-45 g/L)
[0118] Nickel Chloride (30-450 g/L)
[0119] Nickel fluoroborate (0-300 g/L)
[0120] Zinc sulfate (0-30 g/L)
[0121] Ammonium sulfate (0-35 g/L)
[0122] Sodium thiocyanate (0-15 g/L)
[0123] Zinc chloride (0-30 g/L)
[0124] Ammonium chloride (0-30 g/L)
[0125] Phosphoric or phosphorous acid (0-50 g/L)
[0126] Allowable Additives:
[0127] Sulfur containing compounds and surfactants
[0128] Benzene, naphthalene and other "brighteners"
[0129] Allowable Temperature range:
[0130] 25° C.-80° C.
[0131] Temperature control should be controlled to within +/−2° C.
[0132] Allowable Voltage range:
[0133] 0.2-1.0V, 4V possible in high frequency pulsed deposition
[0134] Allowable Current range:
[0135] 0.5-10 A/dm^2
[0136] Allowable Preferred conditions for the SED process
[0137] Electroplating solution: Nickel sulfate, 240 g/L. Nickel chloride, 45 g/L. Boric acid, 30 g/L.
[0138] Additives: Sodium dodecyl sulfate (SDS) 600 mg/L
[0139] Temperature: 25° C. (room temperature)
[0140] Voltage: 4V @ 75% duty cycle 100 ns pulse period
[0141] Current: 10 A/dm^2 (target)

[0142] Silver
[0143] Allowable Chemicals/concentrations:
[0144] Silver metal (0-120 g/L)
[0145] Silver cyanide (0-150 g/L)
[0146] Silver nitrate (0-450 g/L)
[0147] Potassium cyanide (45-160 g/L)
[0148] Potassium carbonate (15-90 g/L)
[0149] Potassium nitrate (0-60 g/L)
[0150] Potassium hydroxide (0-30 g/L)
[0151] Allowable Additives:
[0152] Glucose, tartaric acid, Rochelle salt, ethyl alcohol, potassium nitrate, hydrazine, hydrazine sulfate, ammonia, ethylenediamine, 3,5-diiodotyrosine, Na-2-3-mercaptopropane sulfonate, and other "stabilizers".
[0153] Allowable Temperature range:
[0154] 25° C.-50° C.
[0155] Allowable Voltage range:
[0156] 4-6V (strike voltage), 0.1-2V plating voltage, pulse deposition may be possible
[0157] Allowable Current range:
[0158] 0.5-10 A/dm^2
[0159] Preferred conditions for the SED process (process may be modified to reduce cyanides due to their toxicity)
[0160] Electroplating solution: Silver nitrate or silver cyanide-based solution.
[0161] Additives: Sodium dodecyl sulfate (SDS) 600 mg/L, other additives TBD
[0162] Current: 10 A/dm^2 (target)

[0163] Zinc
[0164] Allowable Chemicals/concentrations:
[0165] Zinc cyanide (0-60 g/L)
[0166] Sodium cyanide (0-40)
[0167] Sodium hydroxide (0-80 g/L)
[0168] Sodium bicarbonate/carbonate (0-15 g/L)
[0169] Sodium sulfide (0-2 g/L), catalytic
[0170] Zinc chloride (0-130 g/L)
[0171] Nickel chloride (0-130 g/L)
[0172] Potassium chloride (0-230 g/L)
[0173] Allowable Additives:
[0174] Thiosemicarbazide and their thiosemicarbazone derivatives such as Thiosemicarbazide (TSC), Acetophenone (AcP), Cinnamaldehyde (CnA), Crotonaldehyde (CrA), Furfuraldehyde (FrA), Salcylaldehyde (SaA), Acetophenonethiosemicarbazone (ApTSCN), Cinnamaldehydethiosemicarbazone (CnTSCN), Crotonaldehydethiosemicarbazone (CrTSCN), Furfuraldehydethiosemicarbazone (FrTSCN), Salcylaldehyde thiosemicarbazone (SaTSCN)

[0175] (a) poly(N-vinyl-2-pyrrolidone), and p0 (b) at least one sulfur-containing compound selected from compounds of the formulae:

$$RS(R'O)nH \quad (I)$$

or

$$S—[(R'O)nH]2 \quad (II)$$

[0176] Polyvinyl alcohols, polyethyleneimine, gelatin and peptone

[0177] Allowable Temperature range:

[0178] 25° C.-40° C.

[0179] Allowable Voltage range:

[0180] 3-18V (strike voltage), pulse deposition may be possible

[0181] Allowable Current range:

[0182] 0.1-50 A/dm^2

[0183] Preferred conditions for the SED process (will not deposit pure zinc due to toxicity and difficulty of using DSA anode tech—instead will attempt deposit zinc/nickel alloys)

[0184] Electroplating solution: Zinc chloride, 120 g/L. Nickel chloride 120 g/L. Potassium chloride, 230 g/L

[0185] Additives: Sodium dodecyl sulfate (SDS) 600 mg/L, polyvinyl alcohol MW 5 k-20 k Dalton, as well as polyethyleneimine, gelatin and peptone, 0.1-3 g/L.

[0186] Temperature: 25° C. (room temperature)

[0187] Current: 5 A/dm^2 (target)

[0188] Iron and Ferrous Alloys

[0189] Allowable Chemicals/concentrations (for iron metal):

[0190] Iron sulfate (0-300 g/L) or Iron ammonium sulfate

[0191] Ammonium sulfate (0-120 g/L)

[0192] Ferrous chloride (0-300 g/L)

[0193] Calcium chloride (0-335 g/L)

[0194] Potassium chloride (0-180 g/L)

[0195] Ammonium chloride (0-20 g/L)

[0196] Iron fluoroborate (0-226 g/L)

[0197] Sodium chloride (0-10 g/L)

[0198] Allowable Chemicals/concentrations (for selected stainless steel alloys),

[0199] Iron sulfamate, Cobalt sulfamate, ammonium metavanadate, boric acid, sodium tetraborate, ascorbic acid, saccharin, SDS, potassium dichromate (~300 g/L), nickel sulfate (~80 g/L), Iron sulfate (~50 g/L), Glycine (~150 g/L)

[0200] Allowable Chemicals/concentrations (for selected high-toughness boron steel alloy)

[0201] Ferrous chloride (~200 g/L)

[0202] Malic acid (0.6 g/L)

[0203] Boric acid (40 g/L)

[0204] Dimethylamineborane (3 g/L)

[0205] Allowable Additives:

[0206] SDS

[0207] 1 g/L of condensate of sodium naphthalene sulfonate and formaldehyde

[0208] Allowable Temperature range:

[0209] 25° C.-110° C.

[0210] Allowable Current range:

[0211] 1-400+ A/dm^2

[0212] Preferred conditions for the SED process (iron chloride baths will be avoided due to the tendency for ferric chlorides to form, and due to the extremely corrosive nature of the chloride plating solutions)

[0213] Electroplating solution: Iron fluoroborate (225 g/L), Sodium chloride (0-10 g/L). Boron-alloy and stainless solutions may be pursued at a later date

[0214] Additives: Sodium dodecyl sulfate (SDS) 600 mg/L, 1 g/L of condensate of sodium naphthalene sulfonate and formaldehyde

[0215] Temperature: >50° C. (target)

[0216] Current: 10 A/dm^2 (target)

[0217] Working distance: TBD (suspected to be around the same distance as the radius/half width of the anode)

[0218] Aluminum

[0219] May employ ionic liquids, aluminum chlorides, aluminum chloride-butylpyridinium chlorides (BPC), aluminum chloride-trimethylphenylammonium chloride (TMPAC) and/or aluminum flouroborordes

[0220] Deposition potential likely ~-0.4-1.0V

[0221] Polymer Deposition and Polymer Matrix Composites (PMC)

[0222] Allowable Chemicals/concentrations (for iron metal):

[0223] Polyaniline

[0224] Polypyrrole (monomer 3 g/L)

[0225] polythiophene

[0226] polyphenylenevinylene

[0227] Acetonitrile

[0228] Methanol

[0229] Oxcalic acid

[0230] Sodium salicylate

[0231] Allowable Additives:

[0232] Lithium perchlorate (as a catalyst for deposit adhesion), Tiron (0.05 M)

[0233] Allowable Voltage range:

[0234] 0.4-1.0V

[0235] Allowable Current range:

[0236] 0.1 A/dm^2

[0237] Preferred conditions for the SED process

[0238] Electroplating solution: Pyrrole, 3 g/L. Lithium perchlorate, concentration TBD. Tiron (15.7 g/L), composite materials may be added to the electroplating bath such as: single walled or multi-walled functionalized carbon nanotubes, silica fibers, aerogels, or amorphous powders, boron, boron nitride, silicon carbide, or other high strength ceramic materials, graphene or graphene oxide, etc.

[0239] Additives: Sodium dodecyl sulfate (SDS) 600 mg/L, 1 g/L of condensate of sodium naphthalene sulfonate and formaldehyde.

[0240] Dopants: Tosyl chloride, tosylic acid.

[0241] Temperature: >50° C. (target), max temp will depend on chamber construction mats.

[0242] Metal Matrix Composites (MMC)

[0243] Allowable Chemicals/concentrations:

[0244] All allowable chemicals and concentrations listed in the specification. Functionalized/solvated nanomaterials or high strength ceramic fibers such as: single walled or multi-walled functionalized carbon nanotubes, silica fibers, aerogels, or amorphous

powders, boron, boron nitride, silicon carbide, or other high strength ceramic materials, graphene or graphene oxide, etc.

[0245] Multi-walled carbon nanotubes (MWNTs) may be added in concentrations as high as 4 g/L

[0246] Allowable Additives:

[0247] Polycyclic acid, MHT, Polyacrylic acid, SDS

[0248] Allowable Voltage range:

[0249] 0.4-5.0V

[0250] Allowable Current range:

[0251] 0.1 A/dm^2

[0252] Preferred conditions for the SED process

[0253] Electroplating solution: Pyrrole, 3 g/L. Lithium perchlorate, concentration TBD. Tiron (15.7 g/L), composite materials may be added to the electroplating bath such as: single walled or multi-walled functionalized carbon nanotubes, silica fibers, aerogels, or amorphous powders, boron, boron nitride, silicon carbide, or other high strength ceramic materials, graphene or graphene oxide, etc.

[0254] Additives: Sodium dodecyl sulfate (SDS) 600 mg/L, 1 g/L of condensate of sodium naphthalene sulfonate and formaldehyde Temperature: >50° C. (target), max temp will depend on chamber construction mats.

[0255] Below is a list of electrolytes which may be used to carry the metal, semimetal and electroconductive monomer ions:

[0256] Water

[0257] Allowable temperatures: 18° C.-95° C.

[0258] Allowable voltage range: 0.2-7.2V

[0259] Allowable current range: 0.1-1000 A/dm^2

[0260] Potentially deposited materials: All potentially deposited materials listed in the specification, in addition to Al, Pd, In, Sb, Te, Ga, Si, Ta, and Ti, as well as Metal Matrix Composites (MMC) and codeposited Polymer Matrix Composites (PMC).

[0261] Ionic liquids

[0262] Based on: Ethyl ammonium nitrate, alkyl-pyridinium chloride, 2-hydroxy-N,N,N-trimethyl-ethanaminium, dimethylsulfoxide, or alkyl-arylimidazolium.

[0263] Containing an anion group such as: Hexafluorophosphate, Bis(trifluoromethylsulfonyl) amide, Trispentafluoroethyltrifluorophosphate, Trifluoroacetate, Trifluoromethylsulfonate, Dicyanoamide, Tricyanomethide, Tetracyanoborate, Tetraphenylborate, Tris(trifluoromethylsulfonyl)methide, Thiocyanate, Chloride, Bromide, Tetrafluoroborate, Triflate, etc.

[0264] Containing a cation groups such as: Choline, Pyrrolidinium, Imidazolium, Pyridinium, Piperidinium, Phosphonium (including Tri-hexyl-tetradecylphosphonium), Pyrazolium, Ammonium, Sulfonium, etc.

[0265] Allowable temperatures: 0° C.-300° C.

[0266] Allowable voltage range: 0.2-7.2V

[0267] Allowable current range: 0.1-1200 A/dm^2

[0268] Potentially deposited materials: All listed in 0095, in addition to Al, Pd, In, Sb, Te, Ga, Si, Ta, Mg, and Ti, as well as Metal Matrix Composites (MMC) and codeposited Polymer Matrix Composites (PMC).

[0269] FIG. **7**A illustrates a 3D model of a structure to be fabricated by stereo-electrochemical deposition of layers of copper performed under the following conditions:

Parameter	Value
Voltage	Dynamically adjusted via Zieglar-Nichols PID (1.8-3.8 V)
Pulse period	DC
Electrolyte	Copper sulfate hexahydrate (250 g), Sulfuric acid (80 g), water (900 g)
Anode	64 Pt—Ru (95/5) pins (0.5 mm diameter)
Cathode	9 mm × 9 mm graphite block
Working distance	0.65 mm
Target deposition current	5.0 mA per pin

[0270] FIG. **7**B is a top view of a structure fabricated by stereo-electrochemical deposition of layers of copper for 6 hours under the conditions described above.

[0271] FIG. **7**C is a side view of a structure fabricated by stereo-electrochemical deposition of layers of copper for 6 hours under the conditions described above.

[0272] FIG. **8**A illustrates a 3D model of a structure to be fabricated by stereo-electrochemical deposition of layers of copper performed under the following conditions:

Parameter	Value
Voltage	Dynamically adjusted via Zieglar-Nichols PID (1.8-3.8 V)
Pulse period	DC
Electrolyte	Copper sulfate hexahydrate (250 g), Sulfuric acid (80 g), water (900 g)
Anode	64 Pt—Ru (95/5) pins (0.5 mm diameter)
Cathode	9 mm × 9 mm graphite block
Working distance	0.7 mm
Target deposition current	5.2 mA per pin

[0273] FIG. **8**B is a side view of a structure fabricated by stereo-electrochemical deposition of layers of copper for 8 hours under the conditions described above.

[0274] FIG. **8**C is a top view of a structure fabricated by stereo-electrochemical deposition of layers of copper for 8 hours under the conditions described above.

[0275] FIG. **9**A illustrates a 3D model of a structure to be fabricated by stereo-electrochemical deposition of layers of copper performed under the following conditions:

Parameter	Value
Voltage	Dynamically adjusted via Zieglar-Nichols PID (1.8-3.8 V)
Pulse period	DC
Electrolyte	Copper sulfate hexahydrate (250 g), Sulfuric acid (80 g), water (900 g)
Anode	64 Pt—Ru (95/5) pins (0.5 mm diameter)
Cathode	9 mm × 9 mm graphite block
Working distance	0.86 mm
Target deposition current	2.1 mA per pin

[0276] FIG. **9**B is a side view of a structure fabricated by stereo-electrochemical deposition of layers of copper for 50 hours under the conditions described above.

[0277] FIG. **9**C is a top view of a structure fabricated by stereo-electrochemical deposition of layers of copper for 50 hours under the conditions described above.

[0278] FIG. **10**A illustrates a 3D model of a structure to be fabricated by stereo-electrochemical deposition of layers of copper performed under the following conditions:

Parameter	Value
Voltage	Dynamically adjusted via Zieglar-Nichols PID (1.8-3.8 V)
Pulse period	DC
Electrolyte	Copper sulfate hexahydrate (250 g), Sulfuric acid (80 g), water (900 g)
Anode	64 Pt—Ru (95/5) pins (0.5 mm diameter)
Cathode	9 mm × 9 mm graphite block
Working distance	1 mm
Target deposition current	3.1 mA per pin

[0279] FIG. **10**B is a side view of a structure fabricated by stereo-electrochemical deposition of layers of copper for 97 hours under the conditions described above.

[0280] FIG. **10**C is a top view of a structure fabricated by stereo-electrochemical deposition of layers of copper for 97 hours under the conditions described above.

[0281] FIG. **11**A illustrates a 3D model of a structure to be fabricated by stereo-electrochemical deposition of layers of copper performed under the following conditions:

Parameter	Value
Voltage	Dynamically adjusted via Zieglar-Nichols PID (1.8-3.8 V)
Pulse period	DC
Electrolyte	Copper sulfate hexahydrate (250 g), Sulfuric acid (80 g), water (900 g)
Anode	64 Pt—Ru (95/5) pins (0.5 mm diameter)
Cathode	9 mm × 9 mm graphite block
Working distance	0.8 mm
Target deposition current	2.6 mA per pin

[0282] FIG. **11**B is a side view of a structure fabricated by stereo-electrochemical deposition of layers of copper for 110 hours under the conditions described above.

[0283] FIG. **11**C is a side view of a structure fabricated by stereo-electrochemical deposition of layers of copper for 110 hours under the conditions described above.

In the description above and throughout, numerous specific details are set forth in order to provide a thorough understanding of an embodiment of this disclosure. It will be evident, however, to one of ordinary skill in the art, that an embodiment may be practiced without these specific details. In other instances, well-known structures and devices are shown in block diagram form to facilitate explanation. The description of the preferred embodiments is not intended to limit the scope of the claims appended hereto. Further, in the methods disclosed herein, various steps are disclosed illustrating some of the functions of an embodiment. These steps are merely examples, and are not meant to be limiting in any way. Other steps and functions may be contemplated without departing from this disclosure or the scope of an embodiment.

We claim:

1. An apparatus comprising:

(a) a reactor configured to contain an electrolyte solution;

(b) an anode array containing a plurality of independently electrically controllable anodes stationary with respect to one another and the plurality of anodes arranged in a two-dimensional array, the anode array configured to be immersed in the electrolyte solution such that each of the plurality of anodes is in fluid contact with the other anodes in the plurality through the electrolyte solution;

(c) a cathode disposed in the reactor such that the cathode is configured to be in fluid contact with the plurality of anodes through the electrolyte solution;

(d) an addressing circuit for receiving a signal containing anode address data and for outputting a signal causing an anode array pattern; and,

(e) a controller in communication with the addressing circuit and the anode array, the controller configured to electrically control each anode in the anode array thereby causing an electrochemical reaction at the cathode to deposit a unitary layer structure corresponding to the anode array pattern signal received from the addressing circuit.

2. The apparatus of claim **1**, further comprising at least one sensor for measuring an electrical current of at least one of the plurality of anodes, or of the cathode.

3. The apparatus of claim **1**, further comprising at least one sensor for measuring an electrical voltage of at least one of the plurality of anodes, or of the cathode.

4. The apparatus of claim **1**, further comprising a timer for measuring an amount of time that a current flows between at least one of the plurality of anodes and the cathode.

5. The apparatus of claim **1**, further comprising a system for positioning either the anode array, the cathode, or both, to control a distance between the anode array and the cathode.

6. The apparatus of claim **5**, wherein the system for positioning is an electro-mechanically controlled system.

7. The apparatus of claim **1**, wherein each of the plurality of anodes has an exposed surface having a geometric shape chosen from the group consisting of a hexagon, a rectangle, a triangle, a square, or a circle.

8. The apparatus of claim **1**, wherein each of the plurality of anodes is constructed out of a material resistant to physical depletion through electrolysis.

9. The apparatus of claim **1**, wherein the anode array is connected electrically to, or disposed upon an integrated circuit, semiconductor, or combination of conductive and insulative elements meant for biasing the plurality of anodes.

10. The apparatus of claim **1**, wherein the plurality of anodes is arranged in rows in the two-dimensional array.

11. In a reactor including a cathode and an anode array containing a plurality of independently electrically controllable anodes arranged in a two-dimensional array and held stationary with respect to one another, a method comprising:

(a) immersing the anode array and the cathode in an electrolyte solution such that the anode array and the cathode are in fluid contact with each other through the electrolyte solution;

(b) according to an anode array pattern signal, electrically controlling each anode of the plurality of anodes in the anode array; and,

(c) causing an electrochemical reaction at the cathode that deposits a unitary layer structure in response to the anode array pattern signal.

12. The method of claim **11**, further comprising sensing an electrical current of at least one of the plurality of anodes, or of the cathode.

13. The method of claim **11**, further comprising sensing an electrical voltage of at least one of the plurality of anodes or of the cathode.

14. The method of claim **11**, further comprising measuring an amount of time during which an electrodeposition current flows between at least one of the plurality of anodes and the cathode.

15. The method of claim **11**, further comprising adjusting a position of either the anode array, the cathode, or both, to control a distance between the anode array and the cathode.

16. The method of claim **15**, where the adjusting is performed by an electro-mechanically controlled system.

17. The method of claim **11**, wherein the unitary layer structure to be deposited on the cathode includes depositing at least one material selected from the group consisting of gold, silver, zinc, Zn/Fe/Co/Ni alloys, copper, nickel, tin, iron, stainless steel, aluminum, titanium, polypyrrole, silicon, tungsten carbide MMC, PMC, BNNT Reinforced 316L, and SWCNT/Cu matrix.

18. The method of claim **11**, wherein an electrical current applied to at least one anode in the anode array is maintained between 0.1 A/dm^2 and 1200 A/dm^2.

* * * * *